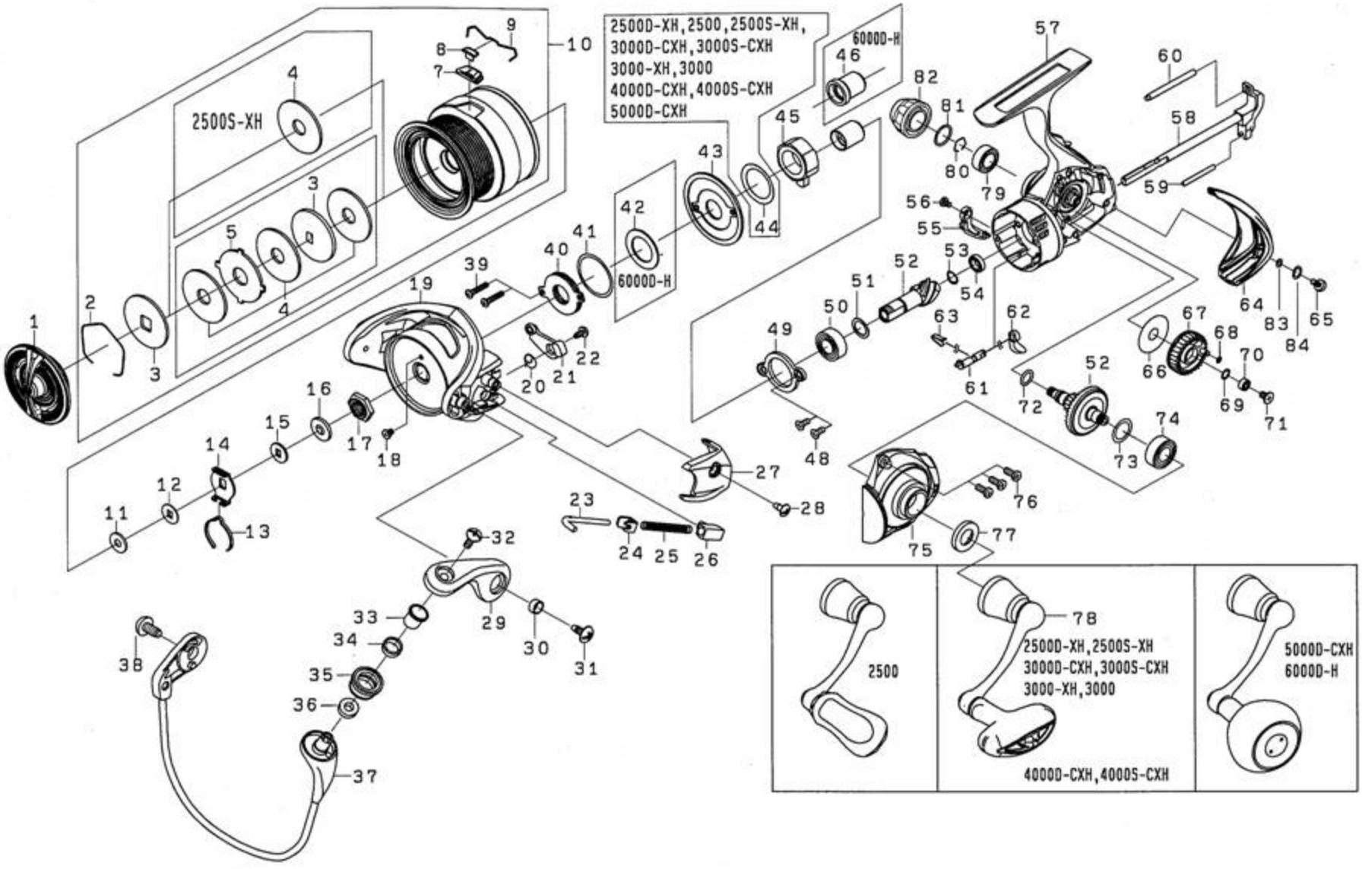
2500D-XH,2500,2500S-XH,
3000D-CXH,3000S-CXH
3000-XH,3000
4000D-CXH,4000S-CXH
5000D-CXH
6000D-H
2500S-XH
6000D-H
2500
2500D-XH,2500S-XH
3000D-CXH,3000S-CXH
3000-XH,3000
4000D-CXH,4000S-CXH
5000D-CXH
6000D-H